Transport Refrigeration Units

A Technical Assessment

1009992

Transport Refrigeration Units

A Technical Assessment

1009992

Technical Update, September 2004

EPRI Project Manager

M. Duvall

EPRI • 3412 Hillview Avenue, Palo Alto, California 94304 • PO Box 10412, Palo Alto, California 94303 • USA
800.313.3774 • 650.855.2121 • askepri@epri.com • www.epri.com

DISCLAIMER OF WARRANTIES AND LIMITATION OF LIABILITIES

THIS DOCUMENT WAS PREPARED BY THE ORGANIZATION(S) NAMED BELOW AS AN ACCOUNT OF WORK SPONSORED OR COSPONSORED BY THE ELECTRIC POWER RESEARCH INSTITUTE, INC. (EPRI). NEITHER EPRI, ANY MEMBER OF EPRI, ANY COSPONSOR, THE ORGANIZATION(S) BELOW, NOR ANY PERSON ACTING ON BEHALF OF ANY OF THEM:

(A) MAKES ANY WARRANTY OR REPRESENTATION WHATSOEVER, EXPRESS OR IMPLIED, (I) WITH RESPECT TO THE USE OF ANY INFORMATION, APPARATUS, METHOD, PROCESS, OR SIMILAR ITEM DISCLOSED IN THIS DOCUMENT, INCLUDING MERCHANTABILITY AND FITNESS FOR A PARTICULAR PURPOSE, OR (II) THAT SUCH USE DOES NOT INFRINGE ON OR INTERFERE WITH PRIVATELY OWNED RIGHTS, INCLUDING ANY PARTY'S INTELLECTUAL PROPERTY, OR (III) THAT THIS DOCUMENT IS SUITABLE TO ANY PARTICULAR USER'S CIRCUMSTANCE; OR

(B) ASSUMES RESPONSIBILITY FOR ANY DAMAGES OR OTHER LIABILITY WHATSOEVER (INCLUDING ANY CONSEQUENTIAL DAMAGES, EVEN IF EPRI OR ANY EPRI REPRESENTATIVE HAS BEEN ADVISED OF THE POSSIBILITY OF SUCH DAMAGES) RESULTING FROM YOUR SELECTION OR USE OF THIS DOCUMENT OR ANY INFORMATION, APPARATUS, METHOD, PROCESS, OR SIMILAR ITEM DISCLOSED IN THIS DOCUMENT.

ORGANIZATION(S) THAT PREPARED THIS DOCUMENT

Sacramento Municipal Utility District

This is an EPRI Technical Update report. A Technical Update report is intended as an informal report of continuing research, a meeting, or a topical study. It is not a final EPRI technical report.

ORDERING INFORMATION

Requests for copies of this report should be directed to EPRI Orders and Conferences, 1355 Willow Way, Suite 278, Concord, CA 94520. Toll-free number: 800.313.3774, press 2, or internally x5379; voice: 925.609.9169; fax: 925.609.1310.

Electric Power Research Institute and EPRI are registered service marks of the Electric Power Research Institute, Inc. EPRI. ELECTRIFY THE WORLD is a service mark of the Electric Power Research Institute, Inc.

Copyright © 2004 Electric Power Research Institute, Inc. All rights reserved.

CITATIONS

This document was prepared by

Sacramento Municipal Utility District
PO BOX 15830
Sacramento, CA 95852-1830

Principal Investigator
W. Warf

This document describes research sponsored by EPRI.

The publication is a corporate document that should be cited in the literature in the following manner:

Transport Refrigeration Unit: A Technical Assessment, EPRI, Palo Alto, CA: 2004. 1009992.

ABSTRACT

This report evaluates the prospects for operating transport refrigeration systems on electricity while they are stationary at a distribution center or refrigerated warehouses. Because most transport refrigeration units (TRUs) in use today are powered by diesel engines, concentrations of diesel exhaust products including particulate matter occur near these distribution centers. Operating TRUs on electricity would eliminate diesel exhaust emissions concentrations at these facilities, but would increase costs 10% compared to diesel, assuming the use of presently available technology. Prospects for improving transport refrigeration technology are identified. These include the initiation and adoption of energy efficiency standards for transport refrigeration systems, and testing protocols for systems that include both the refrigeration unit and the insulated trailer. The energy efficiency of most transport refrigeration systems appears to be much lower than other refrigeration equipment, however the design and operating conditions that are accommodated include a broad range of temperatures, heating and cooling, atmospheric control, and fast pull down to allow fast preparation for accepting a refrigerated load. Barriers to broader introduction of electrically operated refrigeration systems are identified through interviews of TRU operators. A detailed cost analysis that considers first cost, infrastructure cost, and fuel and maintenance costs is presented.

CONTENTS

1 **INTRODUCTION.....1-1**
TRU Inventory..... 1-2

2 **TRANSPORT REFRIGERATION SYSTEMS: OPERATIONS OVERVIEW.....2-1**
Grocery Warehouse Operators..... 2-1
Discussions with a Specialty Restaurant Food Distributor..... 2-4
Discussions with Dairy Products Company..... 2-4
Summary of Operational Concerns..... 2-5
Operating Time..... 2-6

3 **TECHNOLOGY OVERVIEW.....3-1**
System Cost..... 3-7

4 **TECHNOLOGY BENCHMARK.....4-1**

5 **ANALYSIS OF STEADY STATE POWER REQUIREMENTS.....5-1**

6 **INFRASTRUCTURE REQUIREMENTS.....6-1**

7 **COST ANALYSIS.....7-1**

8 **CONCLUSIONS.....8-1**

1
INTRODUCTION

A Transport Refrigeration Unit (TRU) is a system designed to keep food and other perishable items under refrigeration while they are delivered from the point of harvest or manufacture to the point of distribution, sale or consumption. Refrigeration systems are installed on insulated vans, trailers, containers or rail cars. The worldwide distribution system for foods, medicines, and perishable items depends heavily on refrigerated transport for its functioning, and the largest operators of TRUs are the food and grocery industries, shipping and drayage companies, and the freight industry. Many TRUs are used on smaller milk or ice cream delivery trucks.

The industry has evolved over time towards high reliability and lowest cost systems. Reliability is needed to assure minimum product spoilage, as well as low maintenance cost and competitive position. Recent trends include emphasis on remote monitoring and data logging systems to assure a chain of custody and records of product temperatures. Over the past decades of relatively cheap oil for carriers in the US, diesel engine powered systems have provided the most reliable and efficient systems for transport of frozen, fresh, and perishable shipments. Electric powered systems are included only on captive fleets of smaller delivery vehicles for milk and frozen foods, and for containers of products transported by container ships. Diesel powered systems utilize small industrial "off road" engines to operate equipment, usually powered by fuel that is not subject to on road fuel taxes.

In early 2002 the California Air Resources Board (CARB) recognized the transport refrigeration sector as an area where wide use of diesel powered refrigeration systems offered an opportunity to mitigate air pollution generated by these systems. In December 2003 the CARB issued a landmark study of Transport Refrigeration Systems in its Initial Statement of Reasons (ISOR) for proposed rule making. This study analyzed the emissions and technology options for transport refrigeration, with an emphasis on reducing emissions at locations where transport refrigeration systems congregate, creating a high concentration of particulate matter emissions.

In California, there are at least 7740 facilities that handle refrigerated commodities. The CARB estimates that between 4700 and 10,000 California businesses could be affected by rule making related to transport refrigeration.

This report evaluates the prospects for the increased use of electricity to power transport refrigeration by electricity, especially while the refrigerated vehicle is stationary. The CARB ISOR concludes that the use of electricity could mitigate the emissions at congregation points, namely ports, distribution centers, and refrigerated warehouses. The CARB ISOR also reflects the widely held industry belief that broad use of electricity would increase costs and unduly increase the burden of cleaning the air on the affected industries. The question for this report is, could the wider use of electricity in refrigeration systems while stationary offer benefits to these Utility customers? Could the wider use of electrically powered refrigeration systems offer operating advantages, reduce risks, and reduce costs for the refrigerated transport industry? What are the barriers to increase market penetration for electrically powered refrigeration? Could increasing the inventory of the TRUs that can be plugged into the grid increase off peak

electricity sales, and decrease air pollution caused by operating TRUs with a diesel engine? Can customers utilize electricity to operate TRUs? What would the infrastructure costs be? How might electric operation compare to diesel? Are technical improvements in the refrigeration systems needed to allow this? What are the costs and potential savings?

TRU Inventory

According to the CARB Initial Statement of Reasons, the California inventory of transport refrigeration systems includes 30,300 trailer mounted TRUs. Of these about 25% or 7500 are out of state based. Virtually all of these are exclusively diesel powered, perhaps only 1% having "electric standby" capability. Electric Standby is so named because generally the electric motor added to a Trailer type TRU is lower power than the engine system. Because of this lower power, the electric standby system has a lower refrigeration capacity, and is intended to keep the trailer cold in "standby mode" as opposed to accomplishing initial cool down of trailers, as will be discussed later. The inventory also includes 1700 rail mounted refrigeration systems, and 1850 refrigerated containers. The truck van population includes 6500 smaller delivery trucks, bringing the total California inventory to 40,350 transport refrigeration systems.

The containers include electrically driven systems that are used exclusively while the container is on board ship. These systems are usually 480 volt three phase systems that are plugged into the shipboard power system, to avoid the need to operate individual diesel systems. The containers are designed to accommodate a "clip on generator" system that provides electric power once the containers are removed from the ship. The clip on system is retained until the product is delivered to and unloaded at a destination-refrigerated warehouse. Typically, containers are sealed at the point of loading and not unloaded until their destination is reached. Often, containers are plugged in dockside while awaiting transport to their destination, as shown in Figure 1-1.

Figure 1-1
Container Refrigeration systems plugged in at port

The truck and van population includes many smaller TRUs in the less than 25 horsepower range. These usually have electric systems integrated with the basic refrigeration system, allowing them to be plugged in while at their home or other facility. Presumably industry has retained the plug in capability for these because of their relatively low power requirements and because many of the using facilities are in neighborhoods where the noise of operating diesel engines is objectionable.

If the above inventory is accurate, electrically operated refrigeration has a 21% market share in California, on the basis of number of vehicles. This market share is concentrated in the small delivery truck segment and the container segment, where use of electricity is more practical or necessary because of neighborhood concerns. Virtually the entire Trailer TRU segment remains as an un-tapped market share, even though electric standby equipment to electrify these trailers is readily available. This report concentrates on these trailer units, since it is most likely that these could be served by utility furnished electric power at distribution centers and refrigerated warehouses. Any technology improvements would also benefit markets where TRUs are frequently operated on electric power, namely the container market.

In the ISOR CARB acknowledges that it is not confident in its inventory numbers. A portion of the proposed regulation requires reporting of the number of TRUs, facility on time of use, and yearly hours. The initial reporting of this information is required in 2005. Continuous reporting will be required starting in 2009. The ISOR states on page VIII-9: “despite persistent and exhaustive efforts, affected stakeholders did not voluntarily provide requested information, necessitating the facility reporting requirement embodied in the ATCM” (Air Toxic Control Measure).

2
TRANSPORT REFRIGERATION SYSTEMS: OPERATIONS OVERVIEW

To learn how customers use TRUS, interviews of companies operating TRUs or refrigerated warehouses were undertaken. These companies included a couple of major grocery warehouse operations, a distributor of restaurant specialty foods and supplies, a dairy products company, and a frozen food warehouse. From these interviews, operational considerations and constraints, barriers to adoption of electrically driven TRUs were identified. Some performance considerations were learned, and some industry needs discerned.

Grocery Warehouse Operators

The first large grocery warehouse operator spent quite a lot of time with the author explaining how TRUs were used. This operator was interested in conducting a project to evaluate readily available electrically driven TRUs to see if this made business sense. The potential for a project evaporated when senior management decided that conducting such a project was not compatible with their position supporting the California Grocer's Association in opposing any regulation that required use of electric TRUs, and supporting the Grocer's position relative to CARB's proposed regulatory activity. This grocery warehouse operator will be referred to hereinafter as GW1.

GW1 handles food supplies for several grocery store chains. The distribution center where the interviews occurred is one of several captive warehouses owned by the chain. This particular center handles mainly produce (55%) and meat and deli (35%). The other distribution centers for GW1 are spread around the region, and include the following:

- Frozen food distribution center
- Liquids plant for juices and beverages
- Processed dairy (yogurt, cottage cheese)
- Dairy Products

These other refrigerated warehouses also operate fleets of TRUs and deliver products throughout the grocery store chain.

GW1 operates 150 TRUs, running 6 days per week. Most of the units at GW1 are Thermo King SBIIIs. Also included are Thermo King "Whisper" units with data acquisition systems, and newer Thermo King SB310-30 units. The Whisper units include a sound insulation package intended to mitigate noise pollution at the stores. The SB310 model is available with electric standby, although GW1 does not own any so equipped. Some of the TRUs are used for 4 loads per day.

The average expected operating time is between 4 and 8 hours per day. Upon returning to the warehouse empty each trailer is washed out to maintain trailer cleanliness. Washing out the trailer also tends to keep the evaporator coil cleaner, which is mandatory if the system is to run according to specification. About 30 Trailers equipped with TRUs are used for storage both at the facility and at stores. These are typically the older units that have been retired from active on road use. The older trailers tend to have less functional insulation, as according to GW1, the polyurethane foam insulation tends to "pound out" from road vibration, and end up as dust in the insulation space in the trailer walls.

The GW1 facility has 80 doors. These are divided according to the refrigerated warehouse space behind the doors. The facility includes a large area for bananas, including ripening coolers. Bananas are delivered early in the morning in the original refrigerated containers hauled up from the ports. Bananas are maintained in very tight temperature control at about 60 F, and are ripened in a controlled atmosphere. Other doors in the GW1 warehouse are used for meat and deli, chickens, and produce.

In addition to the captive GW1 owned TRUs approximately 100 third party TRU trailers visit the GW1 distribution center each day.

At GW1, the TRU cycles are generally run within a 5-6 degree Fahrenheit temperature window. When not refrigerating, the GW1 approach is to turn the TRUs off, not to idle. GW1 experience suggests that this approach is superior to the timed cycle time used on some Carrier systems of 15 minutes on 30 minutes off, which may include idling the engine when the high temperature set point has not been reached but with the refrigeration system not operating. TRU controller systems are pretty flexible, and can be extensively programmed to match the preferences of their operator.

The TRU maintains the interior space of the trailer at a set temperature. This temperature is called the "set point". Generally speaking, an individual trailer designed for grocery operations can be used for any load, and therefore the load determines the set point required for each trailer. As will be seen later in this report, colder temperatures of course require the TRU to work harder, consuming more fuel, and producing more emissions. It must be noted at this point that deep frozen loads are generally transported in trailers with thicker walls than the standard multipurpose grocery operations trailers operated by GW1. Smaller trailers may also be used to reduce the thermal load on the trailer, which is proportional to the surface area, so that the TRU can maintain colder temperatures. Also, higher ambient temperatures increase the work the TRU must do. Refrigeration set points for different loads hauled by GW1 are as follows.

Temperature Set Points: [1]

- Produce: 40-45F
- Meat and Deli: 20-35F
- Milk and Dairy: 32-40

[1] The ASHRAE Handbook has several chapters on food storage and refrigeration requirements, including specific storage temperature and atmosphere recommendations, %O2, % CO2, and humidity controls. Also respiration and heat of respiration values are given.

- Frozen Food: 0 to -20
- Bananas: 55-72 F.

Some produce loads require mainly moving air to prevent spoilage. This prevents gasses from accumulating in the load, and causing ripening or spoilage. Many types of produce aspire, and loads have to be stacked correctly because air circulation is critical. Some loads may require the TRU to operate in heat pump mode to keep the load from becoming too cold. It is important to note that the engine power on the TRU is at least ten times the power needed to operate fans for air circulation, and that this operating mode may be the least efficient for the TRU.

Incoming Traffic Examples were discussed to help understand how TRUs are used. Drivers who are scheduled to arrive Monday morning at 9 AM typically arrive Sunday PM. Incoming Corn, Loaded at 6 AM in Dixon, arrives at the center at 9 AM, and is sometimes not unloaded until 7 PM. Meat and Deli are scheduled to begin unloading at 3:30-4PM. Typical wait times are 2-6 hours, during which time the TRU is operating to keep the loads at temperature.

The logistics of a distribution center are complex. The receiving schedule is set so that trucks have a time slot for unloading. The schedule is set in 15-minute intervals, with 1-4 truck moves every 15 minutes to avoid a traffic jamb. There are 3-5 trucks unloading beginning at 4PM, 3-5 more at 4:30 and so on. TRUs are fired up 20-30 minutes before the truck is to be loaded, requiring a fast "pull down" to their set temperature. Pull down in this industry means the initial pre cooling of the inside of the trailers refrigerated space to the desired temperature. In some cases, the TRU is started and begins to reach its set point a longer time before the load is to be started, but GW1 policy is to attempt to pull down the trailer just before it is loaded. The TRU control system allows the operator to select the pull down time desired when the unit is started. This time can range anywhere from ½ hour to 4 hours.

Loads are moved from the refrigerated warehouse into trailers, already at the desired temperature. GW1 personnel indicated a reluctance to use electric standby TRUs because they might impact the normal operating schedule. They did indicate that a longer pull down time with exiting electric standby designs could be accommodated, but integrating this capability in a mixed fleet would be difficult. The trailers are to some extent multipurpose, and having a few electric standby units might be operationally problematic. Either the electric refrigeration system should be designed to match the existing operation, or the operation would have to be changed across the board so as not to foil the inventory flow plans.

A second Grocery Warehouse operator (GW2) in Southern California was also interviewed. GW2 operates more than 500 stores along with distribution centers. GW2 had been involved in legal actions surrounding proposition 65 claims, and the author interviewed a representative of corporate counsel. The litigated issue was to establish what emissions levels pose a relevant health risk under proposition 65. Proposition 65 requires that facilities notify employees and the public about such risks. In the action, which was apparently brought by the State and the NRDC, a settlement was reached in which GW2 agreed to absorb costs of improved technology at its facilities. It appears that GW2 included electric standby in their technology selection. GW2 viewed this proceeding as a punitive one.

GW2 also raised the specter of exit fees as another issue that might preclude them from choosing to utilize incremental amounts of electricity. Apparently GW2 had a "direct access" electricity

supply contract with Enron for all of its facilities. The Public Utilities Commission, in March 2002 ruling allowed them to keep their direct access contract provided it was signed before January 2001.[2] However, their understanding was that the net load could not increase by adding new facilities, and the State might assess exit fees if additional electricity was required. Indeed, adding a significant number of electric TRUs might cause incremental demand sufficient to assign exit fees.

Although GW2 had experience with electric standby TRUs, they declined to provide any information because in view of the above, it was not in their best interest to do so.

Discussions with a Specialty Restaurant Food Distributor

The author participated in a meeting with a specialty restaurant food distributor (RF1). This distributor transported refrigerated loads often include multiple zones within the trailer, each with different set points. This is in contrast to GW1 trucks, where the entire load is produce or deli items, perhaps delivered to multiple stores. RF1 provides multiple food types to each customer stop, and these different food types each have different refrigeration temperature requirements. The trailer is segregated with moveable barriers into 3 or 4 sections. The coldest items are typically in the nose of the trucks closest to the refrigeration unit. Remote evaporators are installed along the ceiling of the trailer, to allow different temperature control zones. The trailers have several doors along the side to allow drivers to access the different sections to pull items for an individual restaurant.

At the time of our interview, RF1 had obtained a quotation for installation of electrical infrastructure for the 15-door facility. RF1 said the quote was on the order of $100,000, which they viewed as much too expensive. RF1 also expressed concerns related to drive off with electric cords plugged into the refrigeration system, and also concerned about the safety of drivers climbing up and down out of the cab a few extra times to plug in the TRU. RF1 was also concerned about how much energy they would use and what the electrical costs would be. RF1 also mentioned the incremental 150 lbs of an Electric Standby System weight as a problem.

From an operating standpoint, RF1 seemed to have very good statistics about operating its TRUs. Fuel consumption was stated as 1.02 Gallons per hour. The TRUs run 3.6 trips per week, and have an average on time of 64 hours per week. Summer run time is 80 hours per week. 25% of there on time is at the facility. In 103 F weather, the TRUs run all the time to maintain set point. For certain deliveries, the TRU is upon returning to the warehouse empty shut off for noise reasons. RF1 replaces their trailers every 10 years, and their tractors every 5.

Discussions with Dairy Products Company

Discussions with a dairy products and ice cream company (DP1) revealed that they utilize a captive TRU fleet to transport dairy and ice cream to customers. The fleet consists of 82 trailer TRUs and 30 smaller “Bob Tail” delivery trucks. The Bob Tail delivery trucks utilize Thermo King TDII refrigeration systems that include a 7.5 horsepower electric motor and a 15 horsepower Yanmar diesel. These are plugged in by DP1 to a 40 Amp 240 Volt circuit every night upon returning to the yard. Many of these “Bob Tail” units include cold plates that are

[2] Decision 02-03-055 at cpuc.ca.gov

frozen only with an electrically driven refrigeration system. These remain frozen during deliveries to help the total system stay cold. Typically the cold plates were in a very cold box portion of the delivery truck used for ice cream. Of the 82 Trailer TRUs at DP1, only one older unit has electric standby capability. DP1 was very helpful in our study of existing technology, but was not interested in pursuing electric standby systems or projects on the trailer fleet.

One Frozen Food Warehouse company was interviewed at a West Coast Food Processors Conference. The biggest obstacle to introduction of TRUs in their opinion was the fact that presently they are visited by a huge number of carriers delivering frozen food. These carriers presently pay their own energy costs for delivering these products. If electrically operated TRUs were introduced at their facility, the cost of energy production would be transferred to them. They could not imagine how individual carriers would be billed for electricity.

Summary of Operational Concerns

Based on the above discussions the operators of TRU equipment care the most about the following. These themes are reflected in the design and marketing choices of the two main transport refrigeration equipment suppliers, Thermo King and Carrier.

- Low Cost
- High Reliability and protection of product
- Flexibility- broad range of uses so that operations are flexible
- Fast Pull Down time
- Long maintenance intervals
- Minimum Weight of Equipment

Not mentioned above, but also considered when improving insulation is mentioned, is the volume of space inside the trailer available for product. The outside dimensions of trailers are fixed according to Department of Transportation rules. Increasing insulation thickness decreases the volume inside the trailer and decreases the cargo carrying capacity. According to GW1, standard pallet sizes are used in grocery industry, and these just fit inside of existing trailers with 2.5 inch wall thickness. Usually trailers “cube out” filling all available cargo space before they “weight out” going over the weight limit, the exception being liquids loads where weight constraints seem to more often limit load sizes. TRU operators always seem to raise the concern about weight and volume constraints.

Based on discussions with operators of transport refrigeration systems described above, the barriers to Electric TRU introduction relative to the refrigerated food markets are as follows:

- Cost of equipment
- Cost of Infrastructure
- Electric “Standby” too low power, won’t accomplish pull down

- Who pays for power?
- Margins are thin in the grocery business (little capital investment in new technology, but they do invest in information and control technology to minimize risk and to comply with FDA chain of custody type requirements)
- Out of state based fleets and operators don't understand CA population density and the resulting emissions concerns.
- Peak Rate Tariffs, exit fees, availability of extra power
- Getting in and out of truck to plug in as a safety issue
- Choke points in the grid… the perception of electric industry has reached its generation limit. Is the electric supply reliable?
- Drive off, high voltage
- Weight of Equipment

Operating Time

In considering the potential for electrically operated refrigeration systems, it becomes important to understand the operating time of TRUs in the context of where they are used. GW1 indicated that TRUs are turned on about one half hour before being loaded, and remain running until the load is delivered. Analysis of data provided by GW1 showed that the switched on time for a TRU was approximately half of the clock time, for the sample taken. A sample download file is provided in Appendix 1. Dividing the remaining 12 hours into stage and load, transport cargo, and return to base times, it is reasonable to believe that Grocery operations TRUs are switched on 8-12 hours per day, and actually operate on the order of 4-6 hours per day.

Operations personnel for GW1 stated that the TRU engine on time that they plan for fleet maintenance is about 100 hours per month. This is consistent with the above. Presently GW1, like other TRU operators, does not track operating hours at the facility versus away from the facility. Only total engine hours are known. CARB estimates that TRUs spend most of their operating time while stationary, based on sampling performed by UC Riverside, as described in the ISOR Appendix J[3]. CARB estimates that use of "electric standby" would eliminate half of the total emissions, and all of the emissions concentrated at the facility. It is this concentrated emissions problem that caused CARB to pursue the TRU ATCM.

Future research projects should seek to identify actual operating habits and the location of systems during operation. It is known that some TRUs, often the older and least insulated, are used for extra food storage at warehouses and distribution centers. This practice might be well served with electric power. Could it be that insulating blankets could be added to these stationary trailers to decrease overall energy use?

[3] http://www.arb.ca.gov/regact/trude03/revisor.pdf

3
TECHNOLOGY OVERVIEW

This chapter of the report provides an overview of Transport Refrigeration technology. A later chapter serves to evaluate TRU equipment technologies in relation to other equipment, and still another evaluates the steady state refrigeration requirements.

Truck- trailer TRUs are vapor compression cycle refrigeration systems driven by diesel engine driven reciprocating compressors. The refrigeration systems are mainly manufactured by Thermo King and Carrier, and are installed into trailers by trailer manufacturers. Typically, a Grocer or TRU fleet operator separately orders both a trailer and a TRU. The TRU is drop shipped from the TRU manufacturer to the trailer manufacturer, and installed. In this approach, the TRU must be a complete stand-alone system that can be bolted onto the trailer.

Container systems are vapor compression systems with a hermetically sealed compressor driven by an electric motor, and generally with electric driven fans for both compressor and evaporator fans. Container systems appear to be installed by the drayage companies themselves, and container TRU sales are handled by centralized sales groups of either Thermo King or Carrier, sales being made directly to the drayage companies.

A brief review of the vapor refrigeration cycle is presented here to help the reader understand this basic evaluation of TRU technology. Four main components are used in these refrigeration systems, namely evaporator, compressor, condenser and control valve. The evaporator is an air to liquid heat exchanger that removes heat from the air-conditioned space by cooling air in that space as it flows over the evaporator coil. It is called an evaporator, because the liquid refrigerant that enters the evaporator coil evaporates as heat is absorbed. From the evaporator, gaseous refrigerant flows to the compressor where it is compressed to a higher pressure. In the condenser, the high-pressure gas is condensed to a liquid refrigerant fluid, rejecting heat to the surrounding outside air. The control valve meters the liquid as it flows back into the evaporator, where it absorbs more heat from the refrigerated space as it evaporates.

The approach to TRU construction technology described above limits options for trailer mounted units. Limited space is available for optimizing the condenser design, which is normally mounted in the top of the unit, above the engine and in front of the evaporator coil. The evaporator coil is mounted in the opening in the front of the trailer's refrigerated space. The engine driven compressor is mounted below the evaporator and condenser. Figure 3-1 clearly shows the condenser and the engine driven compressor, and Figure 3-2 shows the evaporator side of the unit inside the trailer. While the location of the condenser coil might not be optimum for air flow, it probably does tend to keep the condenser as free as possible from road dirt and grime in between cleaning and maintenance. It also keeps tubing runs short, and minimizes parasitic system losses.

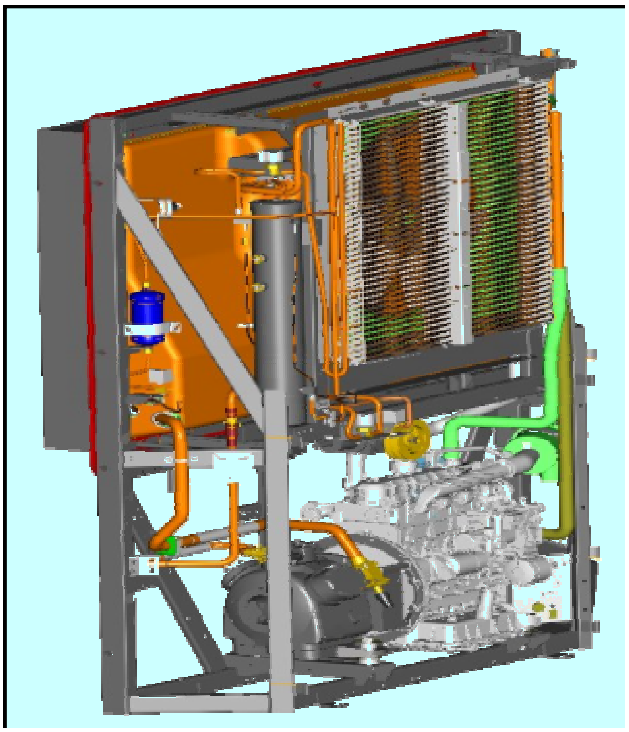

Figure 3-1
Trailer Mounted TRU

Engines used in trailer mounted TRUs are manufactured by Isuzu, Yanmar, and Kubota. These are 1.9 to 2.2 liter industrial diesel engines that operate at low speed, 1800 to 2200 RPM and produce 34 peak horsepower. These engines are large enough to drive the compressor at rates up to about 5 tons of refrigeration capacity. Low engine speed and low combustion temperatures are key strategies to achieving long life and low costs. In addition to direct driving the compressor, V belts also drive Condenser and Evaporator fans, as well as an engine driven 12 Volt alternator that maintains the systems 12-volt starting battery.

Figure 3-2
Evaporator Side of a TRU

The engine operates in essentially two modes, high speed for pull down, and low speed for temperature maintenance. Generally, the controls operate the engine at high speed until the set point is reached. The engine speed is then reduced to low speed mode, and temperature maintenance is undertaken. Set point tolerance is generally +/- 3 to 5 degrees F. If conditions permit the trailer to drop below the lower set point tolerance while in low speed mode, the system may turn off. If the temperature rises above the higher set point tolerance, as in the case of a door opening, the system may go back into high-speed mode to return it to the desired temperature window.

In electric "stand by" units marketed today by Thermo King and Carrier, and electric motor is added to drive the compressor and fans. V belts are used to transmit torque to these devices. The engine is simply clutched out, and a single electric motor takes over providing the power to drive the compressor, and to operate the fans on both the evaporator and condenser. The motor is a 10-15 horsepower industrial induction motor. Correct rotational direction equipment and motor start capacitors may be included. The unit is called electric "stand-by" because the motor is too low powered to accomplish pull down of trailers from hot inside temperatures to lower operating temperatures in a short period of time, like the 20-30 minute period quoted by GW1. Refrigeration capacity on the electric standby systems is between 65% and 75% of the engine driven capacities at American Refrigeration Institute standard rating conditions. An example of this ARI Rated capacity for both engine and electric standby is shown in Table 3-1.

Table 3-1
ARI Ratings of Transport Refrigeration Systems with Electric Standby

Refrigeration Capacity: BTU/h	Engine 0 F set pt.	Motor 0 F set pt.	Engine35F set pt.	Engine 35 F set pt.
SB-III-50	32,000	22,000	46,000	30,000
Super II-50	27,000	20,500	43,500	30,000

Retrofit of electric standby has been discussed and was proposed for a project at a Southern California refrigerated egg distributor. When electric standby retrofit is undertaken, the motor is added above the compressor, and a clutch and pulley assembly is added between the compressor and the engine. This requires extensive rework of the support structure in the TRU, as can be understood by examining Figure 3-3, which shows the TRU that was subject of testing described in Chapter 4 (Technology benchmark). It is much less expensive to install the electric motor capability when the system is first manufactured.

Figure 3-3
Diesel Powered TRU showing engine driven compressor

A list of TRUs models is provided in Table 3-2 and Table 3-3. This is by no means an exhaustive list, but it does provide a sampling of TRU data for some different models of Trailer size units about the TRUs.

Table 3-2
List of representative Trailer Mounted TRU models

Model	Ambient	Evaporator Air	dT	BTU/h	Refrigerant	Weight (lbs.)	Notes
Carrier Extra XT	100	35	65	51000	R404A	1605	This is a 1.9l engine at 1700 RPM, 6 cyl. Compressor
	100	0	100	32000	R404A	1605	This is a 1.9l engine at 1700 RPM, 6 cyl. Compressor
	100	-20	120	18500	R404A	1605	This is a 1.9l engine at 1700 RPM, 6 cyl. Compressor
Carrier Ultra XT	100	35	65	64000	R404A	1610	2.2l engine, 1700 RPM
	100	0	100	33000	R404A	1610	2.2l engine, 1700 RPM
	100	-20	120	21000	R404A	1610	2.2l engine, 1700 RPM

Table 3-3
List of representative Trailer Mounted TRU models – Thermoking Units only

Model	Ambient	Evaporator Air	dT	BTU/h	Refrigerant	Weight (lbs.)	Notes
SB400	100	35	65	60000	R404A	1690	Screw compressor
	100	0	100	40000	R404A	1690	
	100	-20	120	30000	R404A	1690	
Super II Max+	100	35	65	43500	R404A	1468	Condenser section 84” * 51”. Evaporator section 38.16 * 36.25
	100	0	100	27000	R404A	1468	
	100	-20	120	16000	R404A	1468	
SB310	100	35	65	64000	R404A	1635	Mentions 3500 CFM @ 0 inches
	100	0	100	37000	R404A	1635	3200 CFM @ 0.5” static press
	100	-20	120	25000	R404A	1635	Made for Multiple Zone Trailer, with remove evaporators 41.34 * 43.3 * 7.9
Spectrum SB	100	35	65	51000	R404A	1635	Extra weight (120 lbs) for remote evaporators
	100	0	100	31000			
	100	-20	120	20000			

Notice that the TRUs provide refrigeration capacity of up to 5.33 tons or 64,000 BTUs per hour. (1 Ton = 12,000 BTU/h) Also notice that the refrigeration capacity decreases as the temperature set point is decreased. This is because the compressor has to do more work to compress larger volumes of refrigerant gas when the system is operated at lower refrigeration temperatures or "set points". Refrigerant R404A is the standard in the trailer mounted TRU industry, replacing earlier chlorinated fluorocarbon refrigerants. Different technologies are shown in the table, including one unit with a screw compressor and one set up for remote evaporators for multiple zone trailers like the one used by RF1 are shown.

Another noteworthy point from the table is the airflow specified for some of the Thermo King units. These systems tend to have large fans to push air to the back of a 52-foot trailer, around stacks of product in the trailer space. While the rule of thumb for home air conditioning systems is airflow of 400 CFM per ton, these systems are designed with air flows of 600 CFM per ton at highest capacity. Generally, engine pulleys drive fans, and operating the system in low engine speed mode reduces the fan speed, as well as the refrigeration capacity.

This ability to work at a wide range of set points is one design feature that differentiates transport refrigeration from other refrigeration and air conditioning equipment. To achieve different set points, the evaporator coil temperature on TRUs is varied by varying the refrigeration capacity of the system. Commercial refrigeration systems for freezers can be designed to work from freezing to -20, and in doing so may control evaporator coil temperature over a narrow range. Commercial refrigeration is designed for an even narrower temperature range, and can probably operate at a fixed evaporator coil temperature. Air conditioning systems are designed for essentially fixed-point evaporator coil temperatures, and are simply turned on or off when room temperature reaches control limits.

For transport refrigeration systems, set point control temperature measurement is normally at the evaporator inlet. For certain types of loads however, the TRU can control based on evaporator outlet. This is chosen when too cold a refrigerated air supply might damage cargo near that evaporator outlet. In this case, system capacity is reduced to prevent the refrigerated air leaving the evaporator from being below set point. This is called "top side control".

The six cylinder compressors on the Carrier units can apparently turn off some number of cylinders to reduce the flow rate from the compressor at lower loads. Some Thermo King units apparently use a throttling valve to control the compressor outputs. The above design with a screw compressor or designs with a scroll compressor such as the Thermo King CSR container unit should have better turn down characteristics and higher efficiency throughout the operating range than either the throttling or unloaded compressor cylinder approaches.

All TRUs have the ability to operate as heat pumps either to defrost the evaporator coil or to warm up the refrigerated space for loads that require a higher set point in cold weather. Certain kinds of fresh produce frequently require this treatment, and may require fans to run regardless of ambient because of the products respiration tendencies. Allowing this to happen without circulating the air can lead to spoilage.

Finally, as will be seen in the section on steady state loads, TRUs for trailers tend to be somewhat over powered compared to the steady state refrigeration requirements of a reasonably well-insulated trailer. The operational need for fast pull down, the capability to cope with door openings, and the trend towards lighter, less insulated trailers, perhaps with larger internal

volume, have lead industry to compensate with higher capacity higher power refrigeration systems.

System Cost

This chapter provides basic TRU cost numbers, and approximate trailer costs. According to local sales representatives, the following list prices are representative of TRU costs.

Carrier stated the cost of their most popular TRU, the Ultra XT as $19,500 installed. Electric standby adds $2500 to the cost, if the unit is manufactured with electric standby.

Thermo King stated the cost of their top of the line SB-400 unit as $20,985 FOB factory. Delivery and installation is an additional 3.5-5%. This top of the line 60,000 BTU/h unit includes a screw compressor, and will handle ice cream at -20 to +80F-controlled loads. Thermo King also quoted the SB-310 as $20,625 FOB factory. The SB-310 is the top of the line Grocery model, and is available with electric standby for an additional $2000.

Trailer costs according to GW1 maintenance personnel are about $30,000. This cost is for trailers with more than the minimum insulation, 2.5 to 3" walls, floor and roof, and 4" front panel. There is much variation in trailers, the main suppliers being Utility, Wabash, and Great Dane. According to the Thermo King distributor, there was no evidence of a trend to better insulation due to higher fuel prices, and GW1's selection represented better than average insulation.

No cost information for container type systems was obtained. These are sold directly to the steam ship lines or drayage companies by manufacture's home office sales staffs. There are about 30 of these container type customers.

4
TECHNOLOGY BENCHMARK

This report chapter examines performance parameters of TRUs to evaluate the technology in comparison to other air conditioning and refrigeration equipment. TRUs are evaluated by examining fuel consumption, energy efficiency, and other factors.

One Carrier Brochure for trailer TRUs states that the engine used has the proven reliability of a 20-year-old design. TRU technology has been optimized in the direction of lowest cost, lowest maintenance, and highest reliability. Although review of manufacturer's data and model range suggests that different technologies have been investigated and offered, in general, changes to the technology that significantly increase costs have been avoided. It is noted that there is little difference in prices between the top of the line screw compressor Thermo King SB-400, the Carrier Ultra XT with a six cylinder-reciprocating compressor, and the Thermo King SB-310 again with a reciprocating compressor, discussed above.

The primary concern of customers who operate TRUs is low cost, and so a cost savings for operation of TRUs on electricity would be the most persuasive reason for customers to invest in and utilize electric drive TRUs. Thermo King provided a little energy consumption data for an SBIII-50 TRU to allow evaluation of energy costs. This data is provided in the following Table 4-1. The SB III-50 has an ARI rated capacity of 32,000 BTU per hour at 0 F using the engine, and 22,000 BTU/hour on electricity, so the 0 F ratings are representative of maximum load. These tests were performed at 100 F ambient.

Table 4-1
Energy Consumption of an SBIII-50 at 100 F ambient

Drive mode	Refrigeration Capacity BTU/h	Set Point (f)	Energy In. gal/h	Current amps	Power W	(BTU/h) /W	Cost - 12h @ 50% duty cycle ($)
Diesel	17725	-20	0.91		12023	1.47	$8.19
Diesel	14223	-20	0.52		6871	2.07	$4.68
Electric	13727	-20		23.7	8528	1.61	$5.63
Diesel	30490	0	1.06		14005	2.18	$9.54
Diesel	24574	0	0.62		8192	3.0	$5.58
Electric	22590	0		26.5	9536	2.37	$6.29

The data shows the actual energy consumption of a TRU for a few refrigeration delivery points. The energy consumption and the costs for both electric and diesel operation have been calculated in the table. The power output of the diesel was calculated based on assuming a handbook value for the diesel energy content of 43 Mega Joules per Kilogram of fuel, and an efficiency of 35%, which may be reasonable for a low speed diesel near best point operation. The electric power was calculated by multiplying the electric current times 208 volts times 1.73 for three phase

power. Costs assume $1.50 per gallon of diesel, and $0.11 per kW-h for electricity. It is noted that TRUs are classified as off road equipment, and can use off road diesel fuel, avoiding the road taxes, which are at least $0.50 per gallon, so $1.50 per gallon is representative of $2.00 per gallon truck stop diesel prices for California. The result of the cost analysis is that the cost of operating on diesel and electricity, at present rates, are nearly the same. There is not very much operating cost savings by utilizing an electric standby TRU based on the existing design. A more detailed cost analysis is presented in a later chapter.

A fuel consumption test was performed on one of GW1's TRUs. The unit tested was an SBIII+, bill of material number 48444, manufactured in July 1995, operating on R-502 refrigerant. The data from this test was plotted to show the dual mode nature of engine operation. The first 36 minutes of the test were occupied by pull down to reach a 33 F set point, and consuming 0.96 gallons per hour. The next 15 minutes the system maintains the set point, consuming 0.54 gallons per hour. This test demonstrates the dual mode operating characteristic of TRUs, as shown in Figure 4-1. Note this TRU is also pictured in Figure 3-3, where the fuel lines are still removed. The test was conducted by placing a bucket of fuel on a scale and recording time and weight readings off of the scale. The trailer door was opened near the end of the test, and the system went back into a high-speed mode to recover.

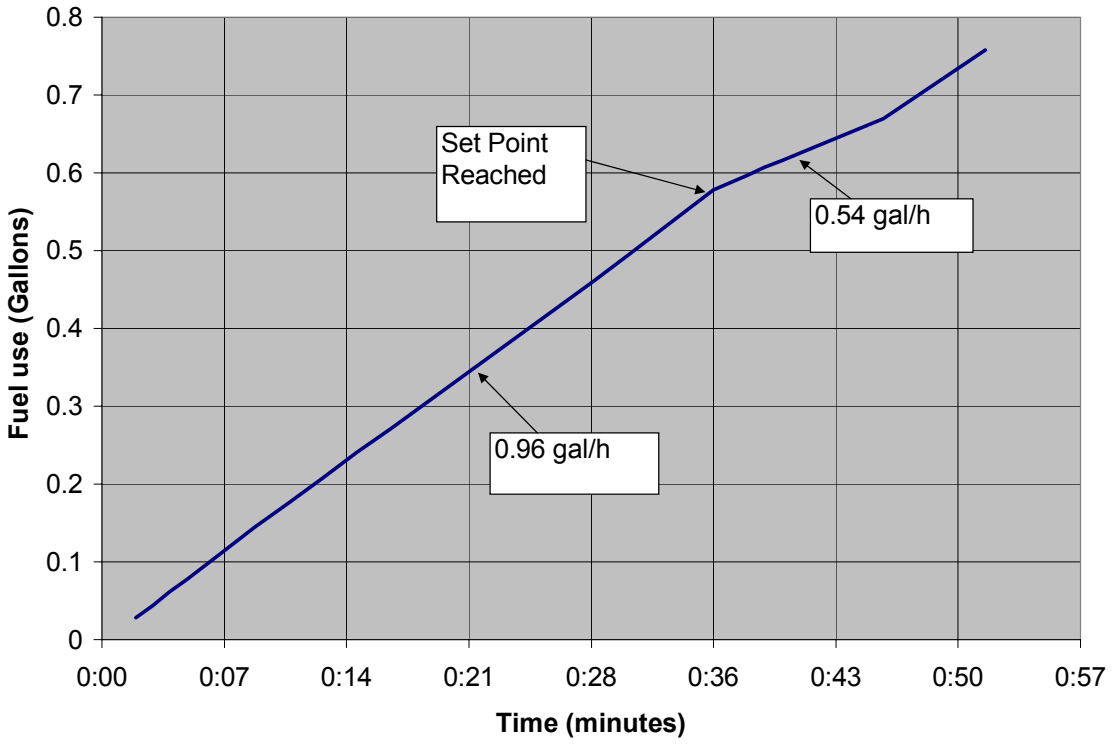

Figure 4-1
Fuel Consumption test for a Diesel Powered TRU

Given the market demands for lowest cost and very high reliability, the safest approach is to use proven technology. In some cases, this includes the use of older designs that have been

optimized over many years of field service work, and learning. This is certainly the case with the diesel engines and reciprocating compressor designs now prevalent in the transport refrigeration industry. This same demand for reliability and low maintenance costs should ultimately drive the industry away from belt drive systems to direct electric motor drives on fans and perhaps ultimately on the compressor (or at least to toothed belt designs).

The energy efficiency ratio (EER) was calculated from the energy consumption data provided by Thermo King and shown in Table 4-1. This ratio is defined as the refrigeration effect delivered divided by the power input, and is expressed in (BTU/h)/W. According to normal practice, the EER is calculated at full capacity of the system. In the above table, the EER has been calculated at the (only) points for which energy consumption is known. As shown in the table, the calculated EER ranges from 1.47 to 3.00. The American Refrigeration Institute (ARI) Directory of Certified Transport Refrigeration Units[4] provides refrigeration capacities, but does *not* provide efficiency values or comparisons.

The Energy Efficiency Ratio and the Seasonal Energy Efficiency Ratio are used in the air conditioning industry to compare different air conditioning systems, and to promote energy efficiency improvements. EER for these systems has improved from around 6 (BTU/h)/W in the early 1960's to 12 or more today. Manufacturers have optimized air conditioning systems through the use of better compressors, better evaporator and condenser designs, and better controls. Because air conditioners do not refrigerate the air down to the levels sometimes required by TRUs, it is not reasonable to directly compare the EER of an air conditioner to that of a TRU. However, it may be reasonable to expect improvements in TRU technology over time similar to those that have been realized in Air Conditioning Systems, taking into account the additional work that is done to reach lower refrigeration temperatures. It may also be reasonable to expect EERs similar to air conditioners when set points of 65F are used.

Evaluating the above data by calculating the cost per thousand BTU and revisiting the EER shows that the lowest costs correspond (of course) to the highest energy efficiency ratio points. This is shown in Table 4-2.

Table 4-2
Energy cost per thousand BTU and EER

Drive System	Set Point (f)	Hourly Energy Cost $/k BTU	EER (BTU/h)/W
Diesel	-20	0.077	1.47
Diesel	-20	0.055	2.07
Electric	-20	0.068	1.61
Diesel	0	0.052	2.18
Diesel	0	0.038	3.0
Electric	0	0.046	2.37

An evaluation of catalogue data for Thermo King's container type refrigeration systems revealed that these have higher energy efficiency ratios than the usual truck trailer systems. The container

[4] http://ariadman.tempdomainname.com/directories/transport/tru0201.pdf

systems used hermetically sealed compressors directly driven by electric motors. These are plugged into shipboard 480V power busses on the ship, and are plugged into shore power dockside. When transported on trucks, "clip on" generators that are temporarily attached to the container during transport over land power the container type units. The advantage of evaluating these units is that the power required to operate these units at full load under electric power is provided in the catalogue data, while fuel consumption is not. This allows comparison of refrigeration delivered per unit power, and comparison of EER between systems.

This comparison is shown in Table 4-3, and graphically shown in Figure 4-2.

Table 4-3
Energy Efficiency Comparison of Trailer TRUs to Container TRUs (BTU/h)/W

Set Point	CSR40	CRR40-H2O	CRR40 Air	SBIII – diesel	SBIII electric
-20	2.44		2.3	2.07	1.61
0	3.38	4.08	3.42	3	2.37
35	3.87	4.59	3.86		
70	4.81				

Refrigerant	R404-A	R134a	R134a	R404A	R404A
Condenser Media	Air	Water	Air	Air	Air
Condenser Temp.	100 F	86 F	100 F	100 F	100 F
Compressor	Scroll	Recip.	Recip.	Recip.	Recip.
Power	Electric	Electric	Electric	Diesel	Electric
Voltage	460 Container	460 Container	460 Container	Trailer	Trailer

As shown in Table 4-3, the highest efficiency system is the CSR40 with a scroll compressor. This unit is rated at 31,500 BTU/h at a 35F set point. It provides a peak efficiency ratio of 4.81 with a 70 F set point, operating conditions that may be comparable to air conditioning systems. The next unit shown in the table is the CRR40 that uses a reciprocating compressor, but also features a water-cooled condenser. The EER values shown are with a water temperature of 86F. The same unit is also rated with an air-cooled compressor, providing an energy efficiency ratio of 3.86 at a 35F set point, and a capacity of 40,100 BTU per hour. Like electric standby, these systems are about 25-35% lower power than the usual trailer systems. Systems designed for 20 foot to 40-foot containers typically have to refrigerate smaller volumes than trailers.

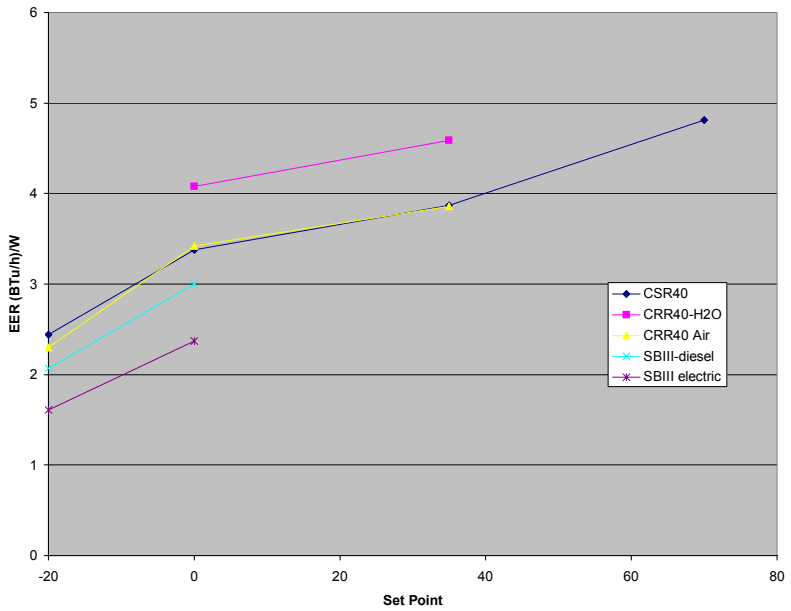

Figure 4-2
EER Comparison of Container Models "Cxx" and Trailer type"SB"

This comparison shows that higher energy efficiency systems are currently commercially available, although not usually utilized in the US over the road refrigerated transport industry. The container systems utilize direct electric drive to the compressor, and electric fans, eliminating belt drive losses as in the "electric standby" systems.

An interesting industry development is the Carrier "Hybrid TRU" that is being tested in Europe. This system is approximately a 30,000 BTU/hour design, intended to offer an efficiency improvement for Europe, where fuel costs are higher, and the use of electric standby is more prevalent for noise reasons. Carrier stated that this design is more expensive than existing Trailer TRUs, but less expensive than a TRU retrofit. The design appears to combine components from an electric container unit and a "clip on generator" drive and generator into a front of trailer mount package. The lower power rating would not match up with the current trailer insulation practices in the US market. Some captive fleets could utilize such a design by acquiring premium trailers, or by using smaller trailers for which this system would have adequate capacity. Alternatively, the design philosophy for this hybrid system could be taken for a larger system. The Carrier Hybrid TRU is shown in Figure 4-3.

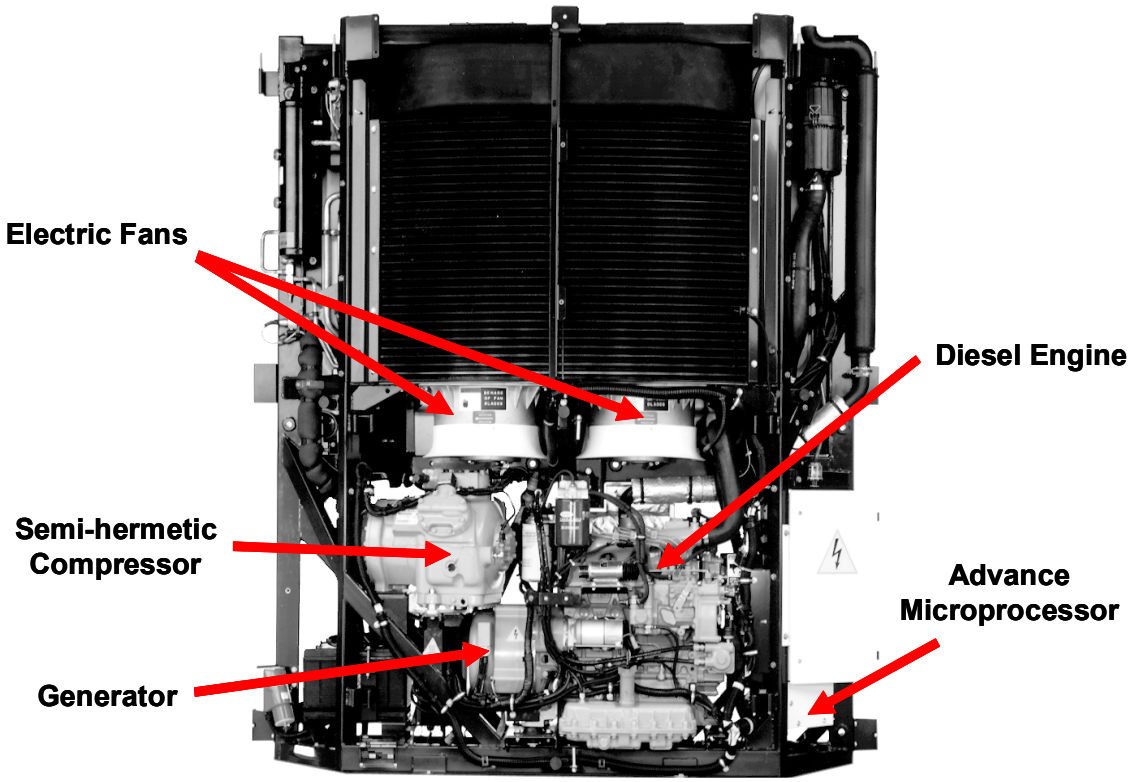

Figure 4-3
Carrier "Hybrid TRU" is marketed in Europe

To summarize, the energy efficiency ratio of Transport Refrigeration Equipment should not be directly compared with other refrigeration equipment, with out taking into account the need to design the TRUs for the following design requirements:

- Broad Range of refrigeration temperatures
- Fast pull down is demanded by customer operations
- Control based on evaporator air outlet temperature or supply air temperature
- Design for high power pull down
- Distribute air over big volume
- Cope with door openings for access to cargo space
- Limited space for condensers, convention of design to fit on one end of box

- One size fits all loads approach
- Capability for heating or cooling

A lack of standards may be slowing progress in the introduction of higher efficiency TRUs in the US. Standards for transport refrigeration equipment in the US should include efficiency requirements, and efficiency reporting or labeling. Such requirements tend to move industry in the direction of improving equipment, and in this transport refrigeration industry, it would have beneficial emissions results also. Fuel costs are increasing, and the expectation of improved efficiency is inevitably going to become more important in the US, as it already is in Europe and Japan. As a case in point, consider the Air Conditioning and Appliance industries.

Air conditioning systems and refrigerators have been the subject of minimum energy efficiency standards. The National Appliance Energy Conservation Act (NAECA) was enacted in 1987 and took affect in the early 1990's. From 1960 to the present, the average unitary market efficiency has been characterized by slow and steady efficiency increases of about 0.15 SEER per year. The only exception to this is a jump of about 1 point in energy efficiency ratio when the first round of energy efficiency standards took effect.[5] This could be a reason for adoption of efficiency standards for TRUs, in addition to emission reduction standards. It may also be appropriate to have standards for and to provide labeling and rating systems for insulated trailers.

Indeed, the Air Conditioning and Refrigeration Technology Institute (ARTI) report HVAC&R Research for the 21st Century published in 1997 states "*the U.S. HVAC&R industry is a mature one in which product innovations have been gradually accepted by the marketplace. Achieving rapid marketplace acceptance of new innovations is difficult in the HVAC&R products generally are viewed as commodities where sales are extremely price sensitive; a small price difference can sway a purchase decision. As a result, industry is not well capitalized to perform long term research in high risk areas*."

The report goes on to suggest that the industry should adopt a goal of improving unitary refrigeration equipment used in the transport sector by 30%. Technologies suggested for evaluation included:

- Use of high efficiency synchronous or switched reluctance motors
- Use of alternative refrigerants
- Optimize fast pull down by using variable capacity components and alternative refrigerants
- Conduct more heat transfer research to improve evaporator and condenser designs

[5] e-Source Commercial Space Cooling and Air Handling Technology Atlas, 2004, Chapter 7

5
ANALYSIS OF STEADY STATE POWER REQUIREMENTS

This chapter discusses the refrigeration load on the TRU. The refrigeration load has two components, namely the heat losses through convection and conduction through the wall of the trailer, and warm air infiltration through air leaks in the shell, and because of door openings or leakage around door seals.

Trailer design is an important element of Transport Refrigeration systems. Some operators use thin wall trailers, per haps as thin as one inch. Frozen food carriers such as DP1 utilize trailers with 4" of insulation all around. The Wabash web site (www.wabashnational.com) provides some information about trailer construction, and some performance comparisons. Wabash claims its Solar Guard trailer design offers a 22-24% fuel cost savings compared to other trailers. It is clear that better insulation and trailer construction is an important system choice. The actual refrigeration requirements depend on the insulation characteristics of the trailer, which is both a function of design and trailer condition and age.

Another important consideration is the type of delivery cycles required. Some refrigerated food companies, such as RF1, make many deliveries during the day, and therefore open the trailer doors many times, often at locations that do not have refrigerated warehouses, or where the doors are open to ambient conditions. Other carriers pick up and deliver product to and from refrigerated warehouses, where the door of the trailer is opened to a refrigerated warehouse space with a door seal minimizing leaks into the trailer and the warehouse. The TRU must be designed to accommodate both of these conditions.

Since the actual thermal conductivity of a combined system like this depends on its as built properties, the model utilizes conductivity of the foam derived from steady state conductance numbers provided by Thermo King. These are likely worst case numbers, and are shown in Table 5-1.

Table 5-1
Worst Case Design thermal losses for trailers

Wall Thickness (inches	Temperature Difference (F)	Refrigeration Required (BTU/h)	Refrigeration Required (W)
1.5	100	25,635	7512
1.5	120	31,598	9260
2.5	100	19,816	5807
2.5	120	24,269	7171

To estimate the amount of cooling required for transport of refrigerated of products, a steady state model of a refrigerated trailer was constructed. This model assumes that the trailer is

constructed as described on the Wabash website [www.wabashnational.com]. A standard 52-foot trailer was modeled, with an inside width of 8 feet and a height of 9 feet, two inches. The trailer has two-inch walls, a two-inch roof, a two and one half inch floor, and a four-inch front wall. These walls are skinned with aluminum skins, 0.04 inches thick, with a plastic inner wall to facilitate cleaning and improve heat transfer characteristics. The skins are supported with aluminum "Z" channels that are riveted and buried inside the polyurethane foam wall filler, in an attempt to minimize conduction paths through the walls that would make warm spots.

The model is dominated by the thermal conductivity of the insulation material in the wall. If a theoretical number for the insulation material in the thickness assumed would conduct lower amounts of heat than observed in practice. In order to make the model represent the above performance of a real trailer, the value of thermal conductance of the wall insulation material was increased from a theoretical value of 0.01 Watts per square meter-degrees C to a value of 0.04 W/ sq. meter C. Real trailers have conduction paths in the walls where heat is lost, as well as air leaks, especially around doors. Some high conductance areas could result where insulation doesn't entirely fill the spaces. Increasing the conductance of the foam is an analytical method to model the performance of the real trailer. Improvements in trailer design and construction might make the actual trailer perform more closely to theoretically possible performance that could cut thermal losses by more than half. Designs should also decrease insulation degradation over time. A separate study of the potential savings resulting from better trailer insulation practices should be undertaken. The model represents a worst-case design condition, as opposed to an optimistic case.

Using the model, the refrigeration capacity required to maintain temperature set point of a given load was then calculated for different ambient temperatures and set points. These are shown in Figure 5-1. In this case, a wind speed of 18 miles per hour was assumed, increasing heat removal from the outer surface of the trailer by forced convection.

This data is thought to represent an average trailer, not a worst-case trailer. The effect of high ambient on refrigeration power can readily be seen in Figure 5-2.

The model was used to evaluate the effect of 4-inch wall thickness trailers as are often used in frozen food service with 95 F ambient conditions. If the refrigeration available is held constant, clearly more insulation is required for a given amount of refrigeration. Most frozen food refrigerated trailers use thicker insulated walls, and may in addition be smaller so that the total space to be refrigerated is reduced. Note that the losses for a two-inch wall trailer at -20 more than double in comparison to losses at 60 F. This explains the use of thicker insulation for deep frozen loads.

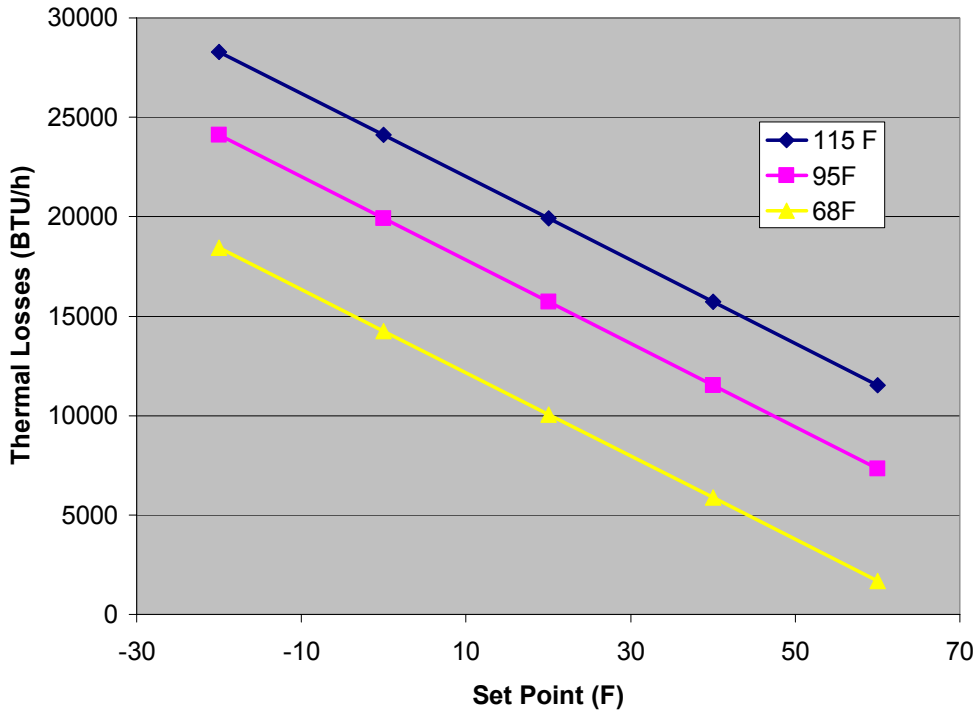

Figure 5-1
Steady State Conduction through a trailer wall, theoretical design case

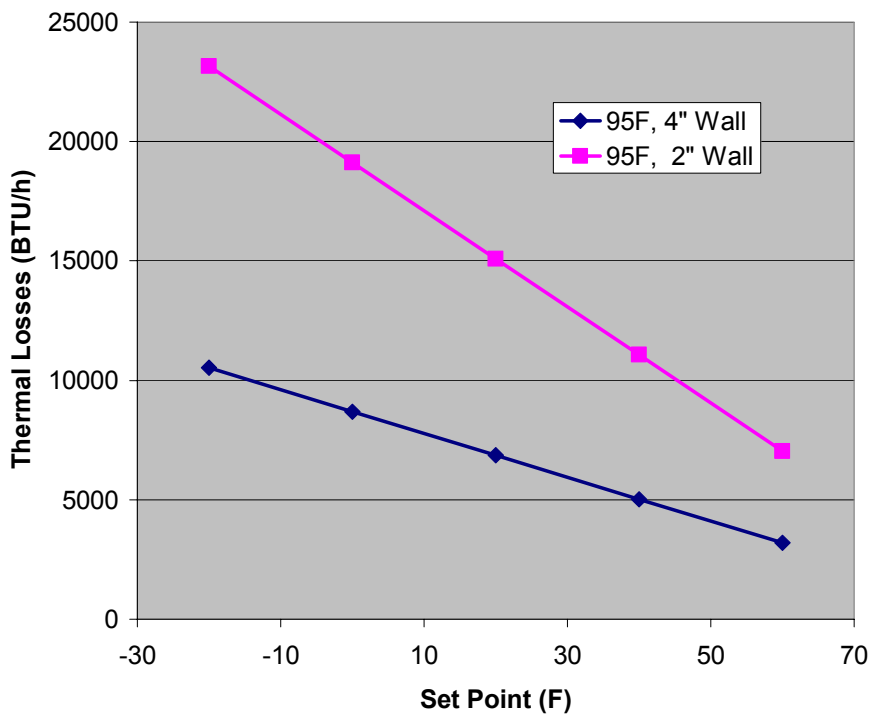

Figure 5-2
Comparison of Steady State losses, 2” vs. 4” walls

The Wabash National web site makes reference to the availability of thinner wall, lighter weight trailers. These would clearly have lower insulating properties. A standard 52-foot trailer with two-inch walls would include about 600 lbs of polyurethane foam. Decreasing the thickness of the walls would not seem to save much weight. The Wabash website also advertises a fiberglass roof trailer. This trailer is promoted as being fuel saving since it decreases the thermal losses through the roof of the trailer.

Another important aspect of the refrigeration load is the amount of air infiltration into the refrigerated space. The ASHRAE[6] Handbook suggests that system designs take into account air infiltration rates on the order of 120 cubic feet per hour while the trailer is stationary, up to 1150 cubic feet per hour while traveling. This amounts to heat loads up to 3800 BTU/h due to air infiltration. The handbook suggests that containers for controlled atmosphere service be specified with leakage rates low enough to assure ability to hold a partial vacuum of a few inches of water column on the system.

Use of fiberglass and other composite materials is also mentioned in the ASHRAE Handbook as having benefits with respect to the insulating properties of the trailers. These may also improve the air infiltration properties. The handbook also mentions the use of rigid polyurethane or polystyrene insulating panels and sealed vapor barriers to reduce conduction through structural members in the trailer and to reduce air infiltration. Either of these approaches would likely improve trailer performance over the worst-case conditions described above.

A representative of GW1 said that older trailers tend to have less insulation; the foam just ends up dust in the bottom of the wall. Trailer life is about 4-5 years, after which the trailer is often sold to a private carrier. If energy consumption is an issue, longer trailer life and standards of performance might be beneficially required for trailers to remain in refrigerated load service. Perhaps trailer designs could incorporate means of refurbishing insulation such that insulating properties are maintained for a longer service life.

As has been discussed, fast "pull down" of the refrigerated space is one of the big concerns of industry. Most of the heat that has to be removed from a trailer will be absorbed in the inner shell of the trailer after it is unloaded, and prior to being washed and re-cooled for the next load. If we assume the inside surface of the trailers have approximately 180 square meters of 1mm thick aluminum material and given a specific gravity of 2.7 g/cc an average trailer includes an inside aluminum skin that weighs 486 kg. Assuming the scuff angle installed in trailers around the bottom 4 feet of the trailer is 3mm thick, an additional 300 kg of aluminum would be present. The specific heat of aluminum is 0.9 kJ/kg-K, giving a total heat content of the inside of a 100 F (38C) trailer of 26,724 kJ (25,330 BTU) to be removed to cool the inside surface of the trailer from 100 F to 32 F (38C to 0C). Since it is GW1 practice to turn on the TRU at least a half hour before the trailer is to be loaded, it is easy to see that an average cooling capacity of about 50,000 BTU per hour is required for "pull down".

Perhaps other designs could be used for pre-cooling trailers, such as external refrigeration systems, or cooling channels in the wall fed by chiller water systems while the trailer is at the dock.

[6] American Society of Heating, Refrigerating and Air Conditioning Engineers, Inc.

6
INFRASTRUCTURE REQUIREMENTS

SMUD prepared an estimate to install infrastructure to run Thermo King Electric Standby Equipped TRUs at GW1 for the purpose of conducting an electric TRU demonstration project. The goals of the proposed project were to determine the impacts to operations and costs for operating a TRU on electricity would have relative to GW1 produce and deli warehouse operations in Sacramento. Although the project was not undertaken, some lessons about infrastructure design, cost and other system design issues were learned.

The GW1 warehouse has 80 doors to support a fleet of 150 TRU equipped trailers. The entire warehouse is refrigerated, and loads are pre-cooled and often staged at the doors prior to loading the trailers. Investigation of the service panel and power available at the facility showed that there was room in the existing service to electrify three doors at low cost, with room for expansion of the system to 10-12 doors without adding transformer or service panel capacity. Receptacles could be added to the surface of the warehouse, easily accessible to the back of trailers when parked at the doors. This would eliminate the need for trenching.

The system designed for GW1 assumed 208 three-phase power would be used because this is appropriate for readily available electric standby transport refrigeration equipment. GW1 did not view the incremental cost of $2000 per TRU as an insurmountable barrier to adopting electric standby, and were interested in evaluating these for potential cost savings. They did not want to pay all the costs of a demonstration project, however, and worked with SMUD to identify other sources of funding to help pay for infrastructure. Thermo King Literature requires a 70 Amp circuit breaker, even though the steady state current draw was expected to be 30 Amps. The larger breaker size reflects conservative design, and ability to handle high inrush current to support compressor-starting torque.

Infrastructure components for these systems are readily available. Pin and sleeve type connectors are widely used at ports for high voltage three phase power connections. These include mechanical contacts that prevent high voltage from being present until the ground pin is inserted. Different styles are available from both ESL and from Hubbell, as shown in Appendix B.

Our infrastructure plan was to include fixed wiring on the trailer from the TRU to the back end of the trailer where a fairly short pigtail could plug into the shipping dock next to the door. A mechanical interlock was included in the conceptual design. This would consist of a normally open solenoid valve that would block the brake lines, locking the trailer brakes when plugged in to electric power to minimize drive off damage.

The cost estimate for four doors using either 208 three phase or 480 three phase. These are shown in the following Table 6-1 and Table 6-2. It is noted that the CARB ISOR makes reference to many available voltages leading to confusion. In fact, the services provided for three phase industrial service are either 208 three phase or 480/277 three phase. 230 Volt single-

phase systems are used on some of the "Bobbed Tail" trucks operated by DP1. These single-phase systems are similar to normal household service connections. Most commercial customers in SMUD territory have three-phase service, and many of the newer ones have 480/277. The confusion mentioned by CARB partly arises from voltage variation that occurs naturally in the distribution system because of voltage drop along feeders from substations. Transformers at substations are tapped by utilities to provide voltage within acceptable ranges throughout the distribution system. Individual customers that are interested in operating TRUs from electricity should contact their utility to determine service availability.

Table 6-1
208 Three Phase 70 Amps per door system for GW1

Component	Quantity	Cost	Cost for GW1
Transformer	1	$17,500	$0
Conductor to service (4/O AI)	400'	$320	$320
400A 3Ph service panel & breakers	1	$1,200	$0
Conductor to outlets 4ga Cu	640'	$572	$572
ESL NEMA 4X plugs	4	$3,000	$3,000
Enclosures, wall mounts	4	$508	$508
Trenching/Conduit	150	$3,300	$78
Total		**$26,400**	**$4,478**
Cost per Door		**$6,600**	**$1,120**

Because the installation for a few doors could be accomplished without transformer, service panel, or trenching, the initial doors at GW1 could be accomplished for $1120 per door. The higher voltage system is less expensive because of smaller conductors and lower current requirement for other equipment.

Table 6-2
480 Three Phase 40 Amps per door system for GW1

Component	Quantity	Cost	Cost for GW1
Transformer	1	$17,500	$0
Conductor to service (4/O AI)	400'	$320	$320
400A 3Ph service panel & breakers	1	$600	$0
Conductor to outlets 8ga Cu	640'	$100	$100
ESL NEMA 4X plugs	4	$2,000	$2,000
Enclosures, wall mounts	4	$508	$508
Trenching/Conduit	150	$3,300	$78
Total		**$24,328**	**$3,006**
Cost per Door		**$6,082**	**$752**

7
COST ANALYSIS

This chapter provides an estimate of costs for operating a TRU on electricity, and compares the costs with diesel operation. First an estimate of electricity costs for GW1 is developed. Then the first purchase cost, operating costs, and infrastructure costs for transport refrigeration are examined.

The cost of electricity for GW1 was estimated by assuming that the 80-door facility elected to install electric services at each of its 80 doors. Furthermore, the analysis assumed that sufficient transport refrigeration systems with electric operation capability were available to allow operation 8 hours per day. Facility demand charges were estimated on an incremental demand basis, assuming 1 hour per day peak, three hours per day shoulder, and 4 hours per day off peak operation. Due to the nature of refrigerated grocery warehousing business, it is unlikely that the warehouse operator would be able to avoid plugging in the TRU during super peak periods that occur during the summer. The incremental peak load is estimated as 5 kW per door, or 400 kW total. Peak demand charges in this case are $2.25 per kW for peak demand and $5.25 per kW for super peak. These charges, once incurred, remain on the monthly utility bill. Based on the operating assumptions, the electricity cost for an incremental 1168 MW-h per year work out to $0.11 per kW-h. The analysis is shown in Table 7-1. The derived cost of electricity is used in the balance of the cost analysis.

At this point, it is important to point out that peak demand charges for electricity are a barrier to adoption of electricity for transportation refrigeration systems. The perception is that industry may be penalized for increasing electricity use, even if there are other public benefits, such as air quality improvement or resource conservation.

Table 7-1
Incremental electricity costs including demand charges

Incremental Peak Load	400 kW				kW-h daily energy	kW-h yearly energy
	Rate	Hours	Daily	Yearly		
Energy, peak	$0.143	1	$57	$10,875	400	14600
Energy, shoulder	$0.095	3	$114	$41,741	1200	438000
Energy, off peak	$0.79	4	$126	$45,961	1600	584000
Sub Total Energy			**$297**	**$108,577**	**3200**	**1168000**
Peak	$2.25/kW	$900 per month		$10,800		
Super summer time peak	$5.50/kW	$2,200 per month		$8,800		
Total demand charges				**$19,600**		
Total annual incremental cost				**$128,177**		
Incremental electricity cost per kW-H		**$0.110**				

It is now possible to calculate and compare the costs of transport refrigeration including first cost (Chapter 3, Technology Overview), infrastructure (Chapter 6, Infrastructure requirements), and energy costs. The author interviewed several stakeholders regarding maintenance costs. Maintenance personnel for GW1 indicated that maintenance costs charged by a leasing company would be in the $1.00 per hour range for diesel TRUs, and that the experienced operator could conduct maintenance operations for less than that. TRU manufacturers generally told us that electric standby was more expensive, but the maintenance manager for one of the TRU manufacturers told us that his experience was that diesel powered systems cost $0.60 per hour to maintain, and electric standby systems cost $0.30 per hour. Since operation on electricity extends the maintenance interval for the diesel engine, the actual operations cost for electrically operated systems is potentially lower than diesel, as shown in Table 7-2.

Table 7-2
Cost Factors for Calculating Total TRU operations costs

TRU Model TRU Description	SB-310 TRU-std	SB-310-50 TRU w/ES	Carrier Hybrid 480 V
Procurement cost	$19,500	$22,000	$25,000
Fuel $/h	$1.28	$1.02	$0.80
Maintenance ($/h)	$0.65	$0.53	$0.40
Life (years)	7	7	7
Annual hours	1200	1200	1200
Interest rate	5%	5%	5%
Infrastructure cost	?	$6,600	$6,082
Infrastructure life (years)	?	20	20

The maintenance cost for diesel TRUs was calculated based on 1200 hours per year and $0.65 per hour. Maintenance costs for diesel-electric standby assume maintenance costs of $0.40 per hour for electric operation, and $0.65 per hour for diesel operation, and that the operating time is divided half electric and half diesel. Infrastructure costs for a 208 volt three phase service was included in the TRU with electric standby, as derived earlier. Note that we did not use the low cost of adding a few doors at GW1, but instead assumed that the installation would require new transformers, service panels, and some trenching.

The Carrier Hybrid TRU is included in the table to provide an estimate of what may be possible. The Carrier TRU is based on a Container type system, and has a capacity of about 30,000 BTU/h at 35 F. Little information about this system was available, except that the cost was less than retrofitting a diesel TRU to electric standby, which was reported to cost $6000 - $8000 during CARB working group meetings. The $25,000 cost is an estimate by the author, as Carrier declined to state the price. This system is not available in the US market yet, but was developed for Europe, where higher energy costs are prevalent. Europe and Japan appear to have more electric infrastructure for this equipment also, because of concerns about noise.

Fuel costs are estimated as 0.85 gallons per hour of diesel, for the standard model and the model with electric standby operated on diesel. This figure presumes that the actual diesel consumption is between measured values for pull down and for temperature maintenance. Electric standby operation is assumed to consume an average of 7 kW. The Hybrid model is assumed to operate at an average power of 5 kW on electricity and 0.7 gallons per hour of diesel. The Hybrid model is assumed to have higher energy efficiency than the standard US model, because of the use of a hermetically sealed – electric driven compressor and electrically driven fans, as was shown in Table 7-2. The lower consumption figures are assumed for the hybrid, as this is the most likely motivation for offering such a unit in Europe. Diesel cost is taken as $1.50 per gallon or about $2.00 per gallon before on road taxes are subtracted.

Combining these figures allows calculated operating cost comparisons given in Table 7-3. This table shows that the operating cost of refrigeration systems using electricity for part of the operating time is less than operating exclusively on diesel.

Table 7-3
Annualized Operating Costs for transport refrigeration equipment

TRU Model TRU Description	SB-310 TRU-std	SB-310-50 TRU w/ES	Carrier Hybrid 480 V
Annual fuel cost	$1,530	$1,227	$960
Annual maintenance	$780	$630	$480
Total annualized operating cost	$2,310	$1,857	$1,440
Total annualized cost/hour	$1.93	$1.55	$1.20

Combining all of the costs, and annualizing the procurement cost of the TRU over seven years, and the infrastructure cost over 20 years, allows the comparison given in Table 7-4. Although electric operation offers lower operating costs, it costs 10% more overall with presently available designs. This does not appear viable on a purely economic basis when all costs are included unless diesel costs reach about $2.50 per gallon at the pump.

Table 7-4
Annualized total cost of TRU operations: Diesel, Electric Standby, and Hybrid

TRU Model TRU Description	SB-310 TRU-std	SB-310-50 TRU w/ES	Carrier Hybrid 480 V
Annualized procurement	$3,369.99	$3,802.04	$4,320.50
Annual fuel cost	$1,530	$1,227	$960
Annual maintenance	$780	$630	$480
Annualized infrastructure cost	$0	$529.60	$488.04
Total annualized cost	$5,679.99	$6,188.64	$6,248.53
Total annualized cost/hour	$4.73	$5.16	$5.21

This conclusion is reached by considering the $0.43 per hour premium for operating an electric standby TRU, or the $0.48 premium for operating the Carrier hybrid, with the assumptions made. This means that electric standby breaks even at $1.93 per gallon off road diesel price, or about $2.43 per gallon on road price.

If public funds were used to partly finance infrastructure costs or electric energy costs this analysis would change, and electric standby could offer a better economic package for the refrigerated transport industry. Mechanisms to finance infrastructure or energy might be available based on the emissions reductions realized with electric standby as described in the CARB ISOR.

8
CONCLUSIONS

The transportation refrigeration market is a relatively mature business area in which small amounts of capital are spent on R&D. Purchase decisions for equipment are often based on small differences in equipment cost, and infrequently take into account future energy costs. The level of system integration is relatively low, and no industry standards for testing complete refrigerated trailers were identified.

TRU design appears to be dominated by the need for fast pull down to keep pace with just in time deliveries and minimum waiting time. Trends in industry show more concern for maximum space and cargo weight in the trailers, instead of minimized operating costs. These trends suggest that TRU operators are not likely to be able to accommodate utility peak demand constraints, and are likely to have operations that require plugging in TRUs right through the summer time super peak rates, even though the systems would be capable of operating on diesel during those times.

Utility research groups could team with TRU manufacturers and The Air Conditioning Refrigeration Technology Institute (ARTI) or other similar entities to conduct projects that would improve energy efficiency and system performance. Such research should be conducted in time for CARBS 2007 technology review, to show how these technologies also improve emissions signatures of TRUs.

Standards should be set up to improve insulation systems and practices. System tests should be developed for completed trailer units after integration of the TRU. Perhaps width waivers could be developed for refrigerated trailers, allowing a couple inches of additional width, provided the width was for insulation increases.

Utilities should examine ways to remove rate barriers that discourage the use of electricity when other benefits, such as improved air quality, are available. Can utilities realize emission reduction credits in proportion to their investment in electric power delivery infrastructure?

Energy use should be considered along with emissions reductions. Considering emissions only might initially lead to higher energy consumption to achieve emission reduction goals, decreasing system resilience in the face of higher energy costs.

Use of Electric Standby TRUs for half of TRU operating time increases costs 10% at present fuel costs. Having the ability to use electricity increases the robustness of transport refrigeration industry, by allowing it two energy sources. Since infrastructure takes time to install, projects that demonstrate the viability of electric operation should be undertaken.

Finally, Energy Efficiency Standards for Transport Refrigeration Systems are needed to help improve system performance. As was discussed earlier, these type of standards lead to significant improvements in efficiency of Air Conditioning systems from 1992 to 2000 (from SEER 9.5 to SEER 12).

A
TRU download data files

Cycle	Time on	Time off	Setpoint	Duration	interval fromp	Note
1	5/20/2002 13:00	5/21/2002 9:44	-10	20:44		initial hour or so on higl
2	5/21/2002 20:32	5/22/2002 5:38	40	9:06	10:48	
3	5/22/2002 6:41	5/22/2002 10:19	40	3:38	1:03	
4	5/22/2002 10:34	5/22/2002 18:19	32	7:45	0:15	
5	5/22/2002 22:33	5/23/2002 10:42	36	12:09	4:14	
6	5/23/2002 12:50	5/23/2002 20:24	35	7:34	2:08	
7	5/24/2002 3:16	5/24/2002 14:41	40	11:25	6:52	
8	5/24/2002 20:07	5/25/2002 3:52	40	7:45	5:26	
9	5/25/2002 5:01	5/25/2002 9:19	40	4:18	1:09	
10	5/25/2002 9:52	5/25/2002 15:08	35	5:16	0:33	
11	5/25/2002 16:18	5/25/2002 17:57	35	1:39	1:10	
12	5/27/2002 1:03	5/27/2002 9:50	40	8:47	7:06	
13	5/27/2002 13:18	5/27/2002 18:54	35	5:36	3:28	
14	5/27/2002 19:50	5/27/2002 20:48	35	0:58	0:56	
15	5/28/2002 7:24	5/28/2002 18:07	35	10:43	10:36	
16	5/30/2002 11:25	5/30/2002 11:26	32	0:01	17:18	
17	5/30/2002 11:27	5/30/2002 19:56	32	8:29	0:01	
18	5/31/2002 0:36	5/31/2002 7:22	40	6:46	4:40	
19	5/31/2002 8:28	5/31/2002 8:36	40	0:08	1:06	
20	5/31/2002 9:35	5/31/2002 9:46	40	0:11	0:59	
21	5/31/2002 10:49	5/31/2002 11:11	40	0:22	1:03	
22	5/31/2002 13:26	5/31/2002 23:15	48	9:49	2:15	
23	5/31/2002 23:21	5/31/2002 23:51	40	0:30	0:06	
24	6/1/2002 0:00	6/1/2002 4:46	40	4:46	0:09	
25	6/1/2002 5:44	6/1/2002 6:13	40	0:29	0:58	
26	6/1/2002 15:18	6/1/2002 20:39	35	5:21	9:05	
27	6/1/2002 21:25	6/1/2002 21:29	35	0:04	0:46	
28	6/2/2002 19:14	6/3/2002 3:48	40	8:34	21:45	defrost included
29	6/3/2002 4:47	6/3/2002 6:03	40	1:16	0:59	
30	6/3/2002 6:57	6/3/2002 15:02	35	8:05	0:54	
31	6/3/2002 15:06	6/3/2002 18:20	30	3:14	0:04	
32	6/3/2002 18:43	6/3/2002 20:08	30	1:25	0:23	
33	6/3/2002 21:00	6/3/2002 21:52	30	0:52	0:52	
34	6/4/2002 18:35	6/5/2002 4:32	40	9:57	20:43	
35	6/5/2002 5:31	6/5/2002 5:51	40	0:20	0:59	
36	6/5/2002 18:36	6/6/2002 3:01	40	8:25	12:45	defrost, hot weather
37	6/6/2002 3:49	6/6/2002 5:02	40	1:13	0:48	
38	6/6/2002 8:22	6/6/2002 14:27	40	6:05	3:20	
39	6/6/2002 19:39	6/7/2002 4:44	40	9:05	5:12	
40	6/7/2002 5:25	6/7/2002 5:28	40	0:03	0:41	
41	6/7/2002 8:18	6/7/2002 14:19	35	6:01	2:50	
	427:18:00			218:54:00	214:25:00	433:19:00
				0.51228645		

B
Infrastructure Equipment

Product Data Sheet Catalog Home | Home Page | StepSearch

HBL430MI7W

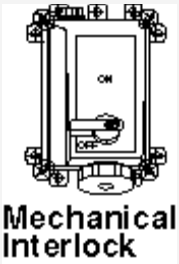

This device provides on/off switched control of a plug connected load and includes an interlocking feature to prevent the plug from being disconnected while the receptacle is energized. The switch cannot be turned "ON" until the plug is inserted properly, and the plug cannot be removed until the switch is turned "OFF."

Hubbell Wiring Device-Kellems Product Specifications	
Product Type	Watertight IEC 309
Material	Non Metallic
Service	Standard
Fused Switch?	No
Type of Device	Mechanical Interlock IEC 309
Amperage	30A North American
Voltage	3Ø 480
Poles and Wires	3 Pole, 4 Wire Grounding
Color	Red
Configuration	UL 1686 C2, IEC 309-2, Clock Position 7, Watertight.
Enclosure Type	Outdoor-4X (Watertight, Washdown) Indoor-12 (Dusttight, Falling Dirt and Noncorrosive Liquids) - IP67.
Horsepower	15
Suggested Plug	HBL430P7W
Dimension A	7.75" (196.9)
Housing Material	Valox
Mounting Inserts Material	Brass.

Mounting Screw Material	Stainless Steel (300 Series).
Contact Carrier Material	High-Impact Thermoset.
Retainer Material	High-Impact Thermoset.
Phase, Ground Sleeves Material	Brass.
Terminal Screw Material	Stainless Steel (300 Series).
Assembly Screw Material	Stainless Steel (300 Series).
Gaskets Material	Solid Neoprene.
Arm Spring Material	Stainless Steel 300 Series
Cover Material	Valox
Sleeve Spring Material	20A and 30A Stainless Steel (300 Series); others are Beryllium Copper multi-contact inserts w/silver plating.
Sealing Gasket Material	Neoprene.
Base Material	Valox®.
Handle Material	Valox.
Enclosure Material	Nonmetallic, enclosure suitable for metallic conduit.
Enclosure Gasket Material	Neoprene.
Shaft Seal Material	Neoprene.
Enclosure Screws Material	Stainless Steel 300 Series.
Hinge Pins Material	Nickel Plated Brass.
Top Material	Valox.
Conduit Hub Material	Zinc Watertight.
Shaft Material	Valox.
Ground Plate Material	Galvanized Steel.
Enclosure Inserts Material	Brass.
Dielectric Withstand Voltage	3000V Min.
Current Interrupting	Certified for current interrupting at full rated current and voltage.
Short Circuit Withstand Rating	Suitable for use on a circuit capable of delivering not more than 10,000 RMS symmetrical amperes at the voltage rating of the receptacle.
Operations	Mechanical 10,000 Cycles, Electrical 6,000 Cycles
Temperature Rise	Max. 30°C temperature rise at full rated current after 50 cycles of overload at 150% of rated current at a power factor of .75.
Endurance	10,000 Mechanical- 6,000 Connect and Disconnect cycles at full rated current and voltage

Impact Resistance	In accordance with UL 746C.
Terminal Identification	In accordance with UL, CSA and international conventions.
Product Identification	Identification and ratings are part of the external label and molded into the receptacle mount.
Mounting	External adjustable feet.
Moisture Resistance	Outdoor - 4X (Watertight, Washdown) Indoor - 12 (Dusttight, Falling Dirt and Noncorrosive Liquids) IP67.
Flammability	UL94-5VA and VO Classification.
Operating Temperatures	Maximum Continuous 75° C Minimum - 40°C w/o impact.
UV Resistance	All materials are UV stabilized

Certifications
UL Listed, CSA Certified.

Watertight Application Guide	
Industry	**Watertight**
Agriculture	Outdoor for fans, heaters, pumps, etc.
Chemical Processing	Where subject to water, corrosion and rough use.
Construction	Outdoors subject to severe weather conditions.
Entertainment	Outdoors subject to severe weather.
Food Processing	Where subject to water, corrosion and rough use.
Food Service	Areas subject to wash downs & heavy cleaning.
Light Manufacturing	Subjected to cleaning, solvents & chemicals.
Manufacturing	Where subject to water, corrosion and rough use (i.e., mills).
Military	Outdoor construction or maintenance subject to severe weather.

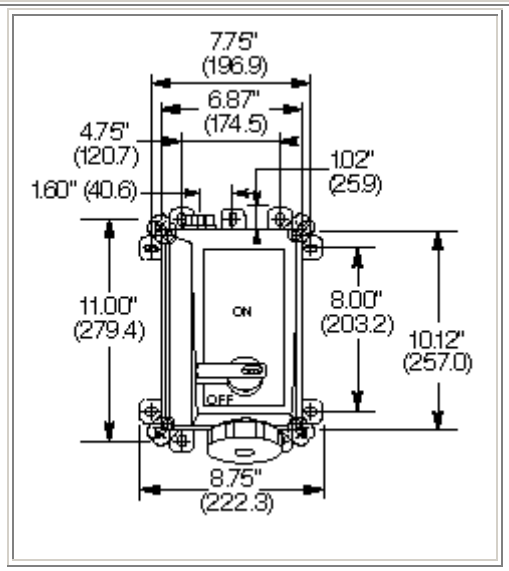

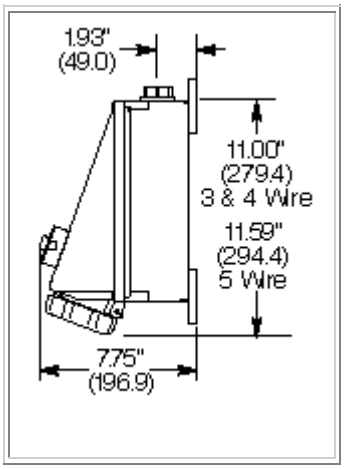

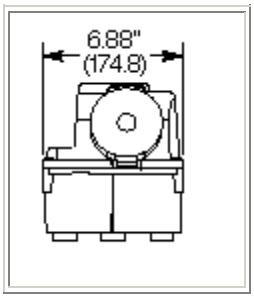

Hubbell Incorporated (Delaware)
185 Plains Road
Milford, CT 06460-2420
Ph: (203) 882-4800
Fax: (800) 255-1031

HUBBELL®
Wiring Device-Kellems

ESL POWER SYSTEMS

Electrical Plugs & Connectors | Safety Interlocks

	Clocking Configuration	Male Plugs	Female Connectors
	Plug / Outlet		
32 AMP 380/480 VAC			
		Cat. No: E333MP Item No: 1800-03P 32AMP 480VAC 3P4W Watertight & UL/cUL Listed	**Cat. No: E333FC** Item No: 1900-01P 32AMP 480VAC 3P4W Watertight & UL/cUL Listed
60 AMP 480 VAC			
		Cat. No: E634MP4 Item No: 1800-05P 60AMP 480VAC 3P4W Watertight & UL Listed	**Cat. No: E634FC4** Item No: 1900-03P 60AMP 480VAC 3P4W Watertight & UL Listed
60AMP 240 VAC			
		Cat. No: E634MP2 Item No: 1800-04P 60AMP 240VAC 3P4W Watertight & UL Listed	**Cat. No: E634FC2** Item No: 1900-02P 60AMP 240VAC 3P4W Watertight & UL Listed
50AMP 240 VAC			
		Cat. No: E534MP Item No: 1800-06P 50AMP 240VAC 3P4W Watertight & UL Listed	**Cat. No: E534FC** Item No: 1900-04P 50AMP 240VAC 3P4W Cord connector
30AMP 240 VAC			
		Cat. No: E334MP Item No: 1800-07P 30AMP 240VAC 3P4W Watertight & UL Listed	**Cat. No: E334FC** Item No: 1900-05P 30AMP 240VAC 3P4W Cord connector
100AMP 480 VAC			
		Cat. No: E1004MP Item No: 1800-09 100AMP 480VAC 3P4W Watertight & UL Listed	
100AMP 240 VAC			
		Cat. No: E1002MP Item No: 1800-10 100AMP 240VAC 3P4W Watertight & UL Listed	

Interlocked Power Modules	CF Connectors	Test Plugs
Cat. No: R32-480-30-22SC-SP Item No: 1700-18A 32AMP 480VAC 3P4W Switched 30A Thermal Magnetic Circuit Breaker. UL/cUL Listed	**Cat. No: CF32-480-SP** Item No: 1910-01 32AMP 480VAC 3P4W Stainless Steel Back Housing with Cord Grip	**Cat. No: TP32-480** Item No: 1476-01 32AMP 480VAC Phase Rotation Tester
Cat. No: R60-480-50-22SSD-SP Item No: 1700-55A 60AMP 480VAC 3P4W Switched 50A Thermal Magnetic Circuit Breaker. UL/cUL Listed	**Cat. No: CF60SS-480-SP** Item No: 1910-03S 60AMP 480VAC 3P4W Stainless Steel Front & Back Housing with Cord Grip	**Cat. No: TP60-480** Item No: 1476-02 60AMP 480VAC Phase Rotation Tester
Cat. No: R60-240-50-65SSD-SP Item No: 1700-68A 60AMP 240VAC 3P4W Switched 50A Thermal Magnetic Circuit Breaker. UL/cUL Listed	**Cat. No: CF60SS-240-SP** Item No: 1910-04S 60AMP 240VAC 3P4W Stainless Steel Front & Back Housing with Cord Grip	**Cat. No: TP60-240** Item No: 1476-05 60AMP 240VAC Phase Rotation Tester
Cat. No: R50-240-50-65SC-SP Item No: 1700-39A 50AMP 240VAC 3P4W Switched 50A Thermal Magnetic Circuit Breaker. UL/cUL Listed	**Cat. No: CF50-240-SP** Item No: 1910-02 50AMP 240VAC 3P4W Stainless Steel Back Housing with Cord Grip	**Cat. No: TP50-240** Item No: 1476-04 50AMP 240VAC Phase Rotation Tester
Cat. No: R30-240-50-65SC-SP Item No: 1700-32A 30AMP 240VAC 3P4W Switched 50A Thermal Magnetic Circuit Breaker. UL/cUL Listed	**Cat. No: CF30-240-SP** Item No: 1910-05 30AMP 240VAC 3P4W Stainless Steel Back Housing with Cord Grip	**Cat. No: TP30-240** Item No: 1476-03 30AMP 240VAC Phase Rotation Tester
Cat. No: R100-480-90-22SSD-SP Item No: 1700-47A 100AMP 480VAC 3P4W Switched 90A Thermal Magnetic Circuit Breaker. UL/cUL Listed		
Cat. No: R100-240-90-65SSD-SP Item No: 1700-65A 100AMP 240VAC 3P4W Switched 90A Thermal Magnetic Circuit Breaker. UL/cUL Listed		

ESL is a world leader in the design and manufacturing of safety-interlocked electrical outlets, plugs and connectors. Custom multi-gang assemblies (pictured above) supply safe power to a diverse range of industries.

SAFE • DURABLE • CUSTOM-DESIGNED SOLUTIONS

Quality products supported by a responsive ESL factory team guarantees total customer satisfaction - projects built to spec, on-schedule, and within budget.

ESL POWER SYSTEMS

ESL Power Systems, Inc.
22653 Old Canal Road • Yorba Linda, CA 92887 USA
Telephone (800) 922-4188 • (714) 283-3755 • Facsimile (714) 283-3407
www.eslpwr.com • info@eslpwr.com

About EPRI

EPRI creates science and technology solutions for the global energy and energy services industry. U.S. electric utilities established the Electric Power Research Institute in 1973 as a nonprofit research consortium for the benefit of utility members, their customers, and society. Now known simply as EPRI, the company provides a wide range of innovative products and services to more than 1000 energy-related organizations in 40 countries. EPRI's multidisciplinary team of scientists and engineers draws on a worldwide network of technical and business expertise to help solve today's toughest energy and environmental problems.

EPRI. Electrify the World

Export Control Restrictions

Access to and use of EPRI Intellectual Property is granted with the specific understanding and requirement that responsibility for ensuring full compliance with all applicable U.S. and foreign export laws and regulations is being undertaken by you and your company. This includes an obligation to ensure that any individual receiving access hereunder who is not a U.S. citizen or permanent U.S. resident is permitted access under applicable U.S. and foreign export laws and regulations. In the event you are uncertain whether you or your company may lawfully obtain access to this EPRI Intellectual Property, you acknowledge that it is your obligation to consult with your company's legal counsel to determine whether this access is lawful. Although EPRI may make available on a case by case basis an informal assessment of the applicable U.S. export classification for specific EPRI Intellectual Property, you and your company acknowledge that this assessment is solely for informational purposes and not for reliance purposes. You and your company acknowledge that it is still the obligation of you and your company to make your own assessment of the applicable U.S. export classification and ensure compliance accordingly. You and your company understand and acknowledge your obligations to make a prompt report to EPRI and the appropriate authorities regarding any access to or use of EPRI Intellectual Property hereunder that may be in violation of applicable U.S. or foreign export laws or regulations.

© 2004 Electric Power Research Institute (EPRI), Inc. All rights reserved. Electric Power Research Institute and EPRI are registered service marks of the Electric Power Research Institute, Inc. EPRI. ELECTRIFY THE WORLD is a service mark of the Electric Power Research Institute, Inc.

1009992

EPRI • 3412 Hillview Avenue, Palo Alto, California 94304 • PO Box 10412, Palo Alto, California 94303 • USA
800.313.3774 • 650.855.2121 • askepri@epri.com • www.epri.com